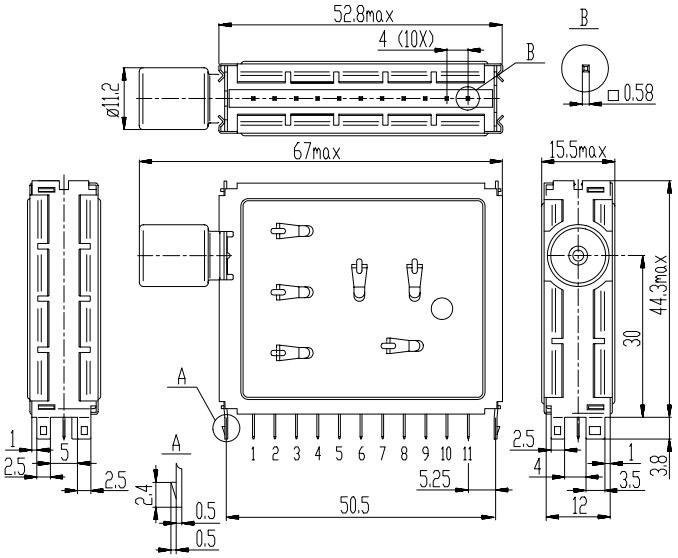

Pin No	Address
1	AGC
2	V_T
3	AS
4	SCL
5	SDA
6	n.c.
7	V_S
8	ADC
9	V_{ST}
10	IF2
11	IF1

Features

- Member of the KS-H-130/140 family small sized VHF/Hyperband/UHF tuner
- Systems CCIR: B/G, H; OIRT: D/K
- Digitally controlled (PLL) tuning via I^2C-bus
- Off-air channels, S-cable channels and Hyperband
- World standardized mechanical dimensions and world standard pinning
- Weak signal booster (I2C controlled switchable gain amplifier)
- Low power
- Compact size
- Comply to “CENELEC EN55020” and “EN55013”

Application

- For TV and VCR

Electrical data

Model No		**KS-H-148 E**	**KS-H-148 EA**	**KS-H-148 O**	**KS-H-148 OA**
Receiving system		CCIR B/G		OIRT D/K	
Channel selection system		PLL (I^2C bus)			
RF input type		IEC-14 Female			
Input frequency p.c., MHz	VHF-L	48,25-154,25		49,75-151,25	
	VHF-H	161,25-439,25		159,25-439,25	
	UHF	447,25-855,25		447,25-855,25	
Input impedance, Ω		75			
Input VSWR, max		4			
IF output type		Symmetrical	Asymmetrical	Symmetrical	Asymmetrical
Intermediate frequency, MHz	Picture	38,9		38,0	
	Sound	33,4		31,5	
Power supply, V/mA		5/65			
Tuning voltage supply, V		33			
AGC range (4-0,3V), dB, min	VHF-L, VHF-H	45			
	UHF	40			
Voltage gain, dB, min		40			
Noise figure, dB, max	VHF-L, VHF-H	9			
	UHF	8			
Image rejection, dB, min	VHF-L	66			
	VHF-H	56			
	UHF	50			
IF rejection, dB, min		65			

SELTEKA Ltd.
Draugystės 19
LT-3031 Kaunas
Lithuanian Republic

Phone: +370 37 456533
Fax: +370 37 313517
E-mail: info@selteka.balt.net
Web: www.omnitel.net/selteka